JENSEN®
music industries

LJECH530-8
Acoustic Guitar Loudspeaker
Ref. # ZJ02500

GENERAL CHARACTERISTICS		
Nominal Overall Diameter	129	mm
Nominal Voice Coil Diameter	25	mm
Magnet Weight	380	g
Flux Density	1.10	T

THIELE-SMALL PARAMETERS			
Voice Coil DC Resistance	R_E	6.00	Ω
Resonance Frequency	f_s	125.0	Hz
Mechanical Q Factor	Q_{MS}	7.48	
Electrical Q Factor	Q_{ES}	0.94	
Total Q Factor	Q_{TS}	0.84	
Mechanical Moving Mass	M_{MS}	4.3	g
Mechanical Compliance	C_{MS}	378.0	μm/N
Force Factor	$B{\times}l$	4.59	Wb/m
Equivalent Acoustic Volume	V_{AS}	3.3	lt.
Maximum Linear Displacement	X_{MAX}	0.50	mm
Reference Efficiency	η_0	0.66	%
Diaphragm Area	S_D	78.5	cm^2
Losses Electrical Resistance	R_{ES}	47.0	Ω
Voice Coil Inductance @ 1kHz	L_E	0.19	mH

CONSTRUCTIVE CHARACTERISTICS	
Magnet	Ferrite
Voice Coil Winding	Copper
Voice Coil Former	Epotex
Cone	Paper
Surround	Treated Cloth
Dust Dome	Non Treated Cloth
Basket	Pressed Sheet Steel

ELECTRICAL CHARACTERISTICS		
Nominal Impedance	8	Ω
Rated Power (DIN 45573 - IEC 268.5)	30	W
Musical Power (DIN 45500)	60	W
Sensitivity @ 1 W, 1 m	91.5	dB

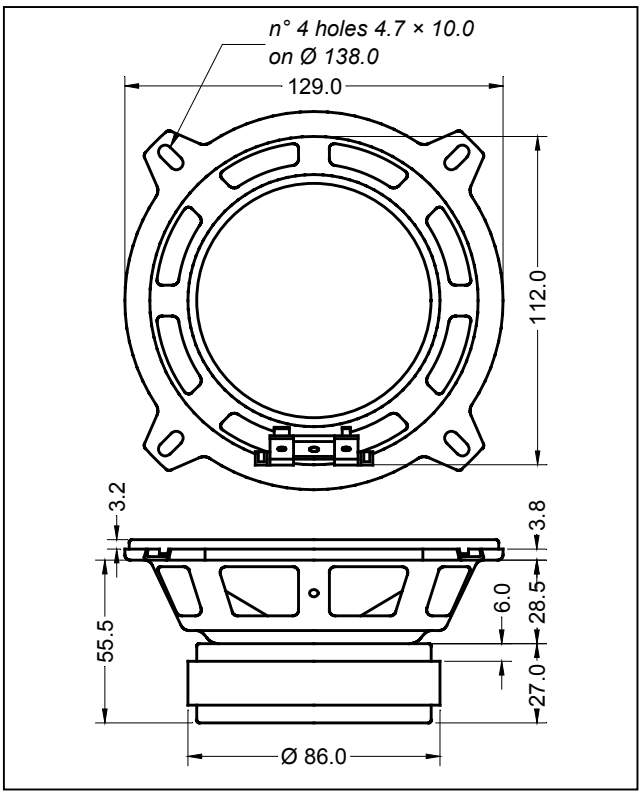

Frequency Response on IEC Baffle (DIN 45575) @ 1 W, 1 m - Impedance

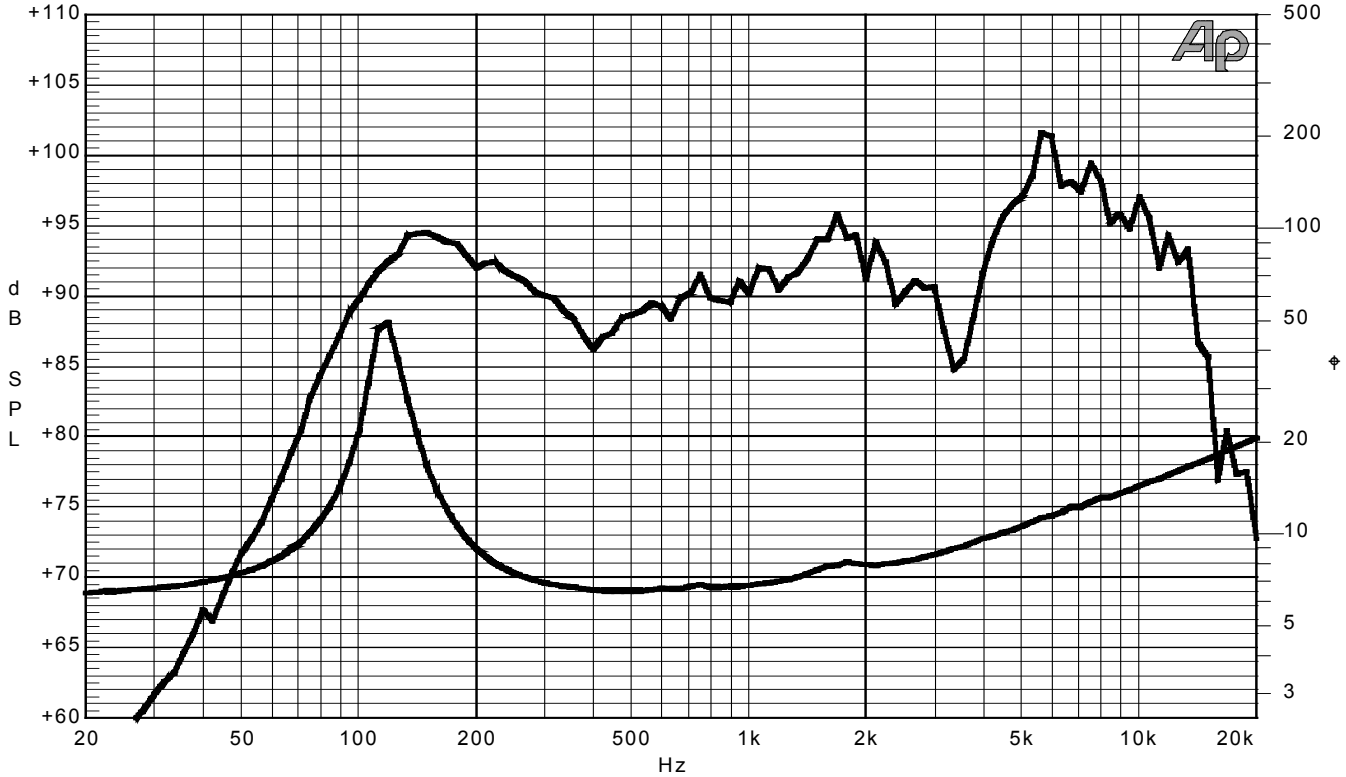

11/10/2004

Tube Amp Doctor GmbH phone +049 (0)6247 90409-0 fax +049 (0)0647 90409-28 internet: www.tubeampdoctor.com